AUTODESK® **AUTOCAD® ELECTRICAL**

Electrical CAD software for controls and schematic design

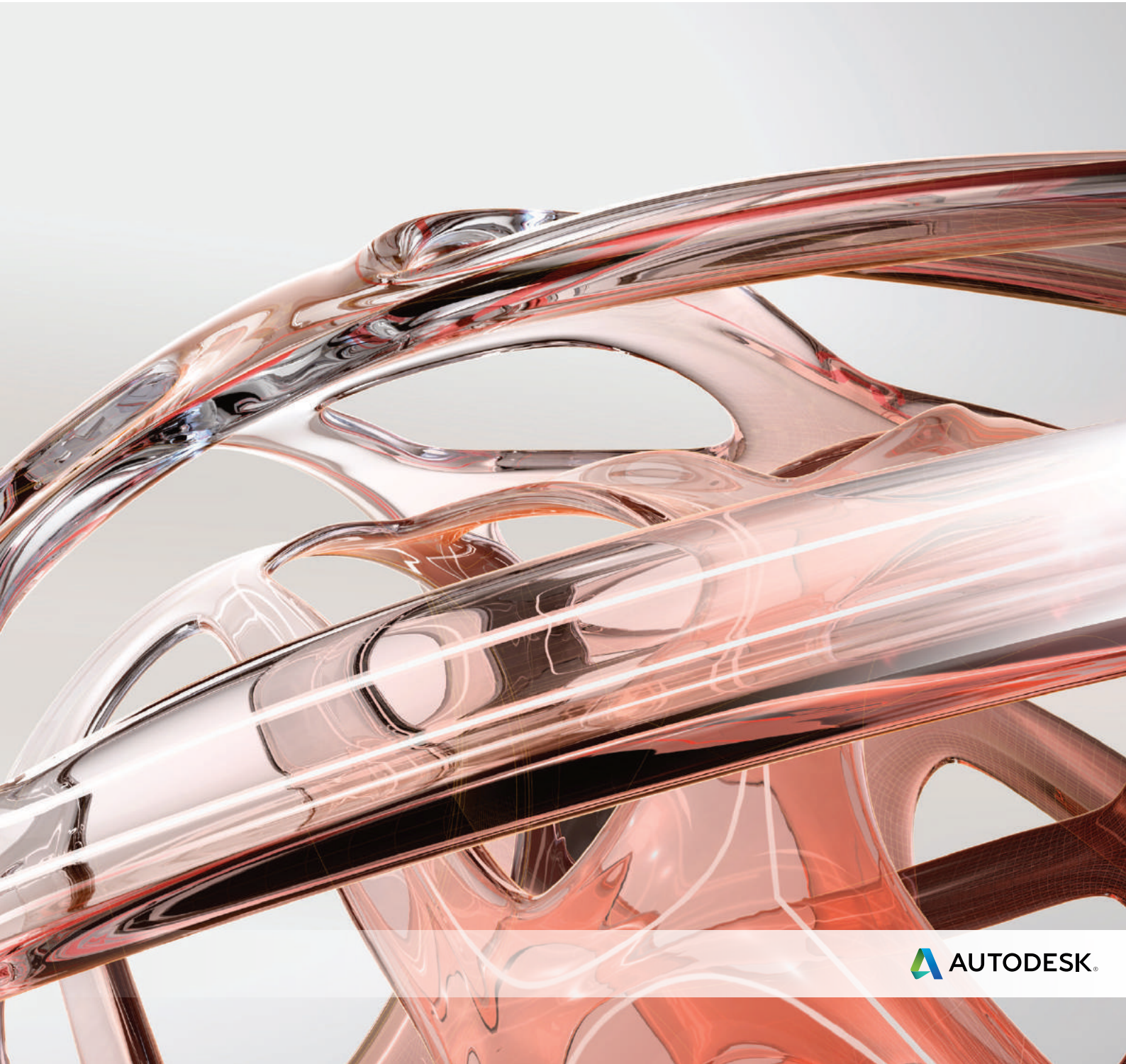

AUTODESK®

AutoCAD Electrical software gives you the tools to design control systems quickly, accurately, and cost-effectively

Facing these issues?

- Creating electrical controls designs with generic software is limiting your productivity.
- Errors are reaching the shop floor and causing delivery delays.
- Components are not being ordered because of inaccurate bills of materials (BOMs).
- Manually adding electrical controls information into 2D or 3D mechanical designs is tedious.
- Sharing designs with downstream users is error-prone and difficult.
- Designers are spending too much time manually generating reports.
- Use of design standards is inconsistent.
- Designers are unable to easily find and reuse designs.

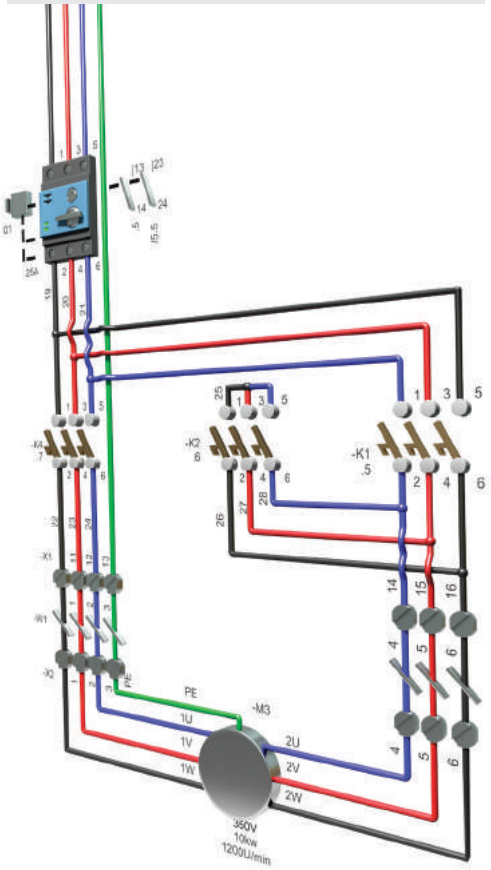

The logical choice for electrical controls design

Autodesk® AutoCAD® Electrical 2015 software helps controls designers to create and modify electrical control systems. Automated tasks and comprehensive symbol libraries help to increase productivity, reduce errors, and provide accurate information to the manufacturing floor.

Stay ahead of the competition with AutoCAD Electrical software which, with added tools on top of Autodesk® AutoCAD® software, offers significant productivity gains by automating many of the complex tasks associated with creating accurate, industry-standard electrical control systems.

Increase productivity

When engineers create electrical control systems using software not specifically built for electrical design tasks, they must often find manual work-arounds to get the job done—wasting valuable design time and limiting productivity.

Since AutoCAD Electrical software is AutoCAD for controls designers, it contains many features and benefits that help users to dramatically increase design efficiency, while maintaining a smooth integration with the familiar AutoCAD environment.

A recent study shows an up to 80 percent increase in productivity when moving to AutoCAD Electrical from AutoCAD.* AutoCAD Electrical can help manufacturers get their products to market faster with lower costs.

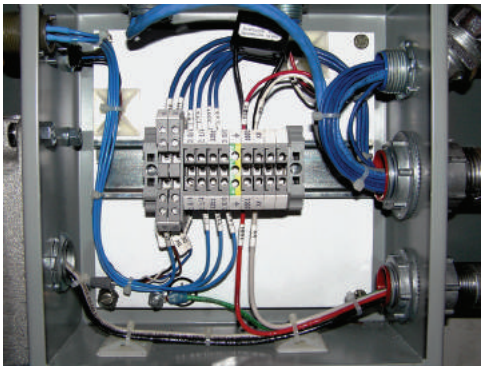

Image courtesy of Amerimax Home Products, Inc.

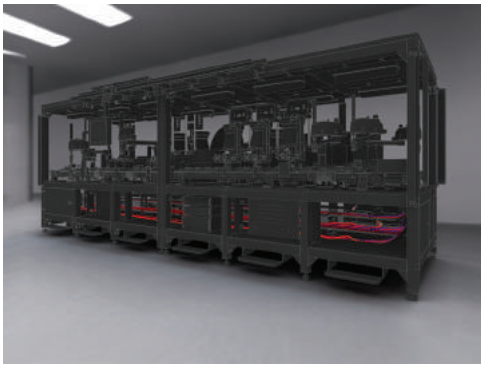

Image courtesy of RND Automation & Engineering

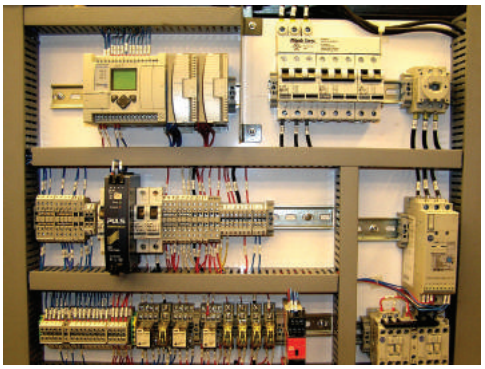

Image courtesy of Amerimax Home Products, Inc.

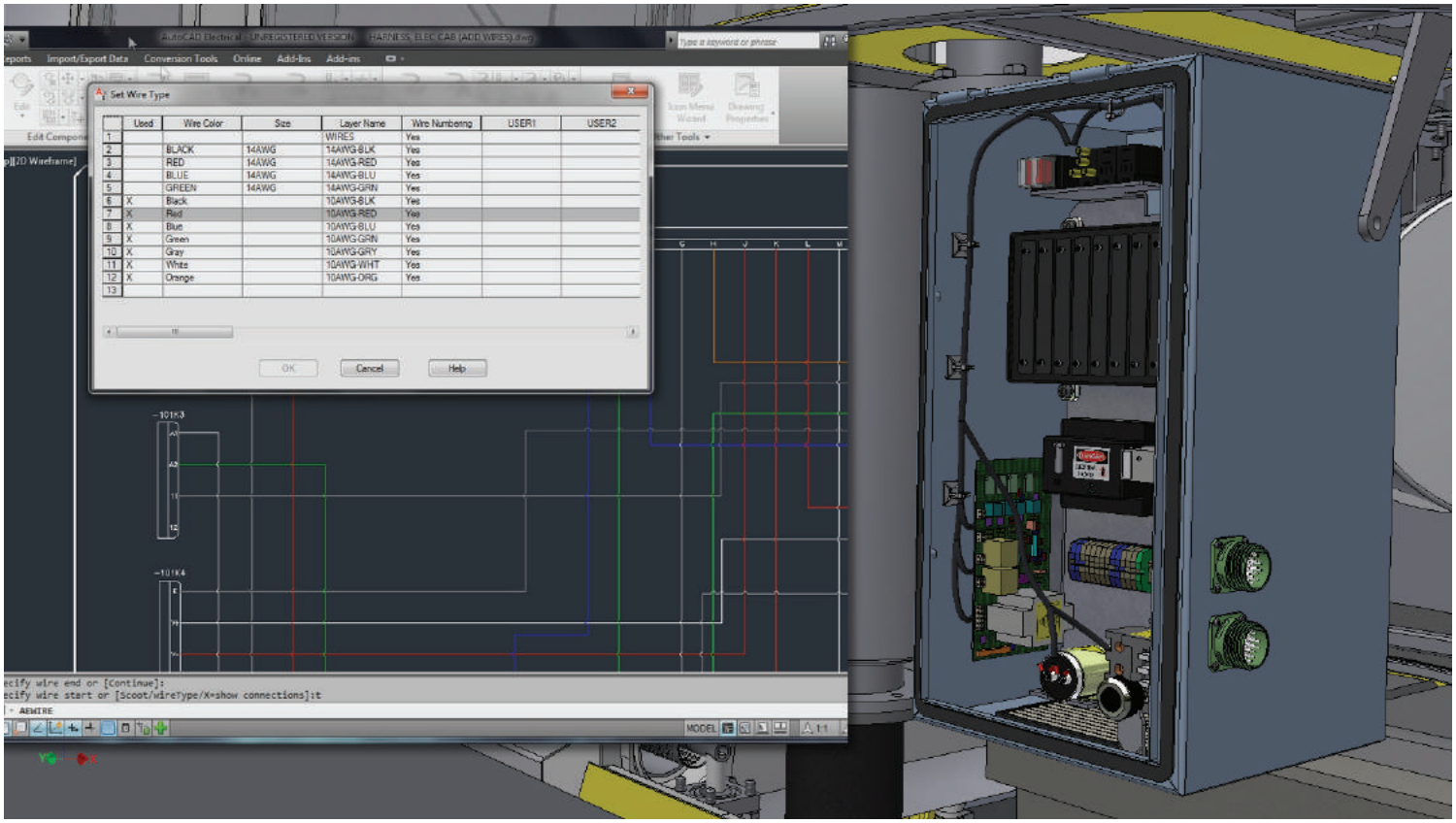

Top 10 reasons to move from AutoCAD to AutoCAD Electrical

1. Comprehensive symbol libraries
2. Automatic wire numbering and component tagging
3. Automatic project reports
4. Real-time error checking
5. Real-time coil and contact cross-referencing
6. Smart panel layout drawings
7. Electrical-specific drafting features
8. Ability to create PLC I/O drawings from spreadsheets automatically
9. Ability to share drawings with customers and suppliers and track their changes
10. Reuse existing drawings

Visit **www.autodesk.com/products/autodesk-autocad-electrical** for more details.

Reduce errors and comply with industry standards

As engineers create electrical controls designs using generic tools, it is easy to introduce errors and design inconsistencies. The ability to virtually eliminate errors before they reach the shop floor can provide a distinct competitive advantage. AutoCAD Electrical includes automatic error-checking capabilities that help designers perform real-time diagnostics to catch problems before the build phase of a project.

In addition to reducing errors, AutoCAD Electrical helps companies compete in the global marketplace by offering support for regional and international standards. With more than 350,000 components from the industry's most popular vendors—including more than 3,000 intelligent PLC I/O modules—AutoCAD Electrical provides a comprehensive library of manufacturer content, enabling users to produce consistent, standards-based designs.

Manage design data

Once the design is complete, it is important to share accurate design and part information with manufacturing. Creating crucial parts lists, BOMs, and from/to wire lists using software that is not built specifically for these tasks can waste valuable time and resources. AutoCAD Electrical includes robust automated reporting tools so the design data being shared with downstream users is current. In addition, AutoCAD Electrical is tightly integrated with Autodesk® Vault, which enables the efficient and secure exchange of design data and promotes earlier collaboration between design and manufacturing workgroups.

Facilitate collaboration

AutoCAD Electrical enables both electrical and mechanical teams to work collaboratively by making it easy to share the electrical design intent for cables and conductors directly with team members using Autodesk® Inventor® software, adding valuable electrical controls design data to the overall design. Users also can publish DWF™ files directly from AutoCAD Electrical and collaborate on 2D and 3D designs with customers, suppliers, and others outside the group.

Different workgroups can manage and track all components of a digital prototype with free** Autodesk® Design Review software—the all-digital way to review, measure, mark up, and track changes to designs—enabling better reuse of critical design data, management of BOMs, and collaboration with other teams and partners.

Now is the time

Want to get unparalleled productivity from your controls design process? Now is the time to make the move to AutoCAD Electrical.

Learn more or purchase

Access specialists worldwide who can provide product expertise, a deep understanding of your industry, and value that extends beyond your software purchase. To purchase AutoCAD Electrical software, contact an Autodesk Premier Solutions Provider or Autodesk Authorized Reseller. Locate a reseller near you at **www.autodesk.com/reseller.**

Autodesk Education

Autodesk offers students and educators a variety of resources to help ensure students are prepared for successful design careers, including access to free** software, curricula, training materials, and other resources. Anyone can get expert guidance at an Autodesk Authorized Training Center (ATC®) site, and validate skills with Autodesk Certification. Learn more at **www.autodesk.com/education.**

Subscribe to Autodesk

Subscribing to Autodesk products is the most flexible and cost-effective way to access the latest design, engineering, and entertainment software and services you need to help grow your business. Autodesk subscribers get access to the latest releases and product enhancements, flexible licensing rights, cloud services, and technical support. Learn more at **www.autodesk.com/subscription.**

Autodesk 360

The Autodesk® 360 cloud-based framework provides tools and services to extend design beyond the desktop. Streamline your workflows, effectively collaborate, and quickly access and share your work anytime, from anywhere. Learn more at **www.autodesk.com/autodesk360.**

*The AutoCAD Electrical Productivity Study compares the time required to complete 10 tasks in both basic AutoCAD and AutoCAD Electrical. The conclusion: switching to AutoCAD Electrical can help increase your productivity by as much as 80 percent.

**Free products are subject to the terms and conditions of the end-user license agreement that accompanies download of this software.

†All Subscription benefits are not available for all products in all languages and/or regions. Flexible licensing terms, including previous version rights and home use, are subject to certain conditions.

Autodesk, the Autodesk logo, AutoCAD, ATC, Autodesk Inventor, DWF, and Inventor are registered trademarks or trademarks of Autodesk, Inc., and/or its subsidiaries and/or affiliates in the USA and/or other countries. All other brand names, product names, or trademarks belong to their respective holders. Autodesk reserves the right to alter product offerings and specifications at any time without notice, and is not responsible for typographical or graphical errors that may appear in this document. © 2016 Autodesk, Inc. All rights reserved.

AUTODESK®